MODEL

8+ UPPER SADDLE ASSEMBLY

* # - TO SPECIFY COLOR
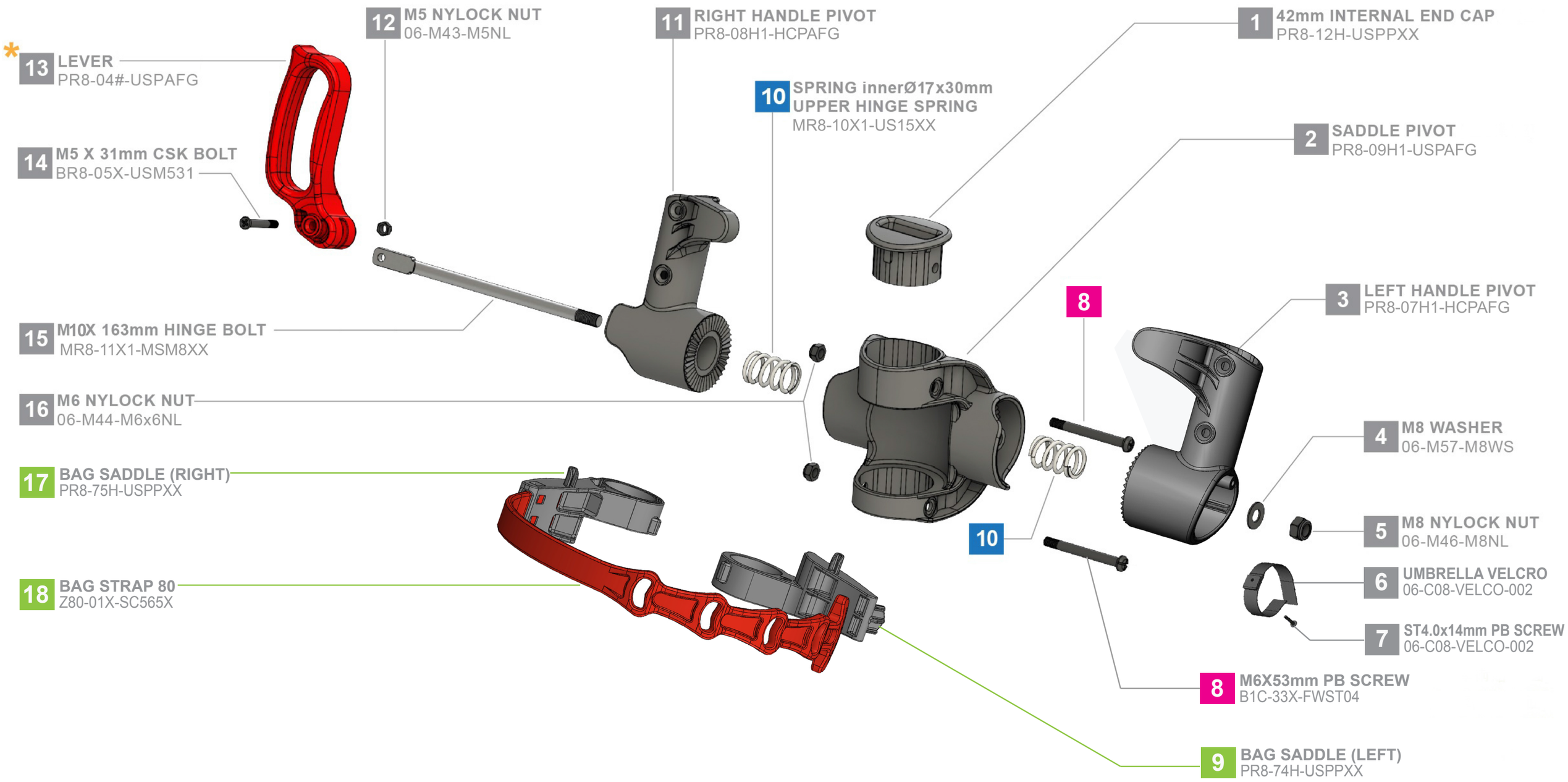
G - GREY